PART NO.					
CP5555-1	IF THIS DOCUMENT IS PRINTED IN HARDCOPY, IT IS FOR INFORMATION ONLY AND THEREFORE NOT SUBJECT TO UPDATING CONTROLS. ALWAYS REFER TO VIEWSTATION FOR THE LATEST ISSUE.	FIRST ANGLE PROJECTION	DO NOT SCALE	THIS DRAWING IS CONFIDENTIAL AND IS SUPPLIED ON THE EXPRESS CONDITION THAT IT SHALL NOT BE LOANED OR COPIED OR DISCLOSED TO ANY OTHER PERSON OR USED FOR ANY PURPOSE WITHOUT THE WRITTEN CONSENT OF AUTOMOTIVE PRODUCTS p.l.c	YEAR 1997

AUTOMOTIVE PRODUCTS p.l.c.
CAD AP RACING

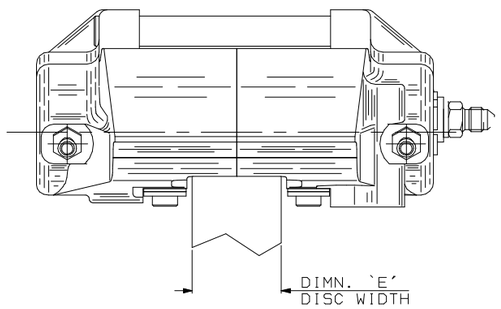

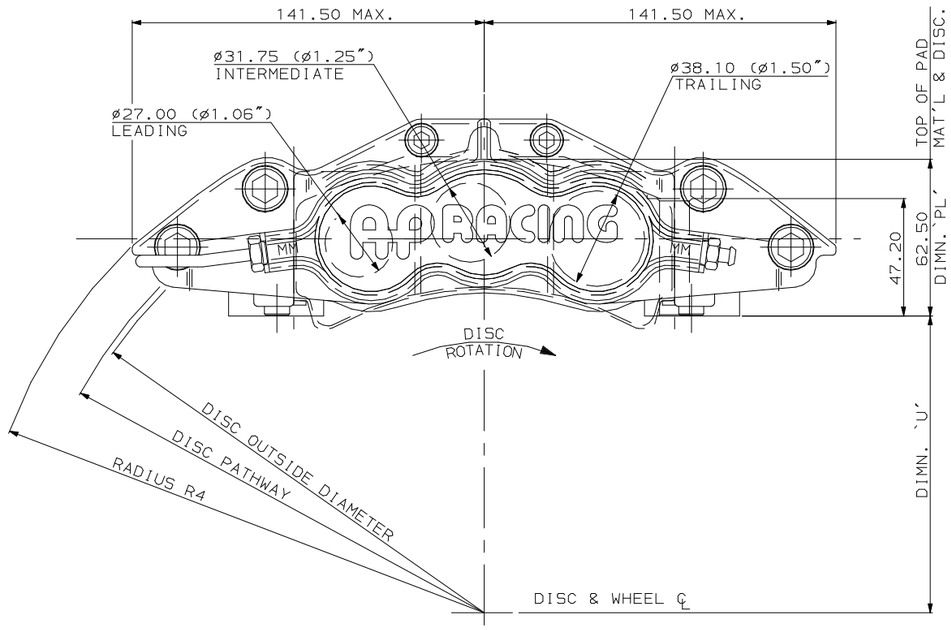

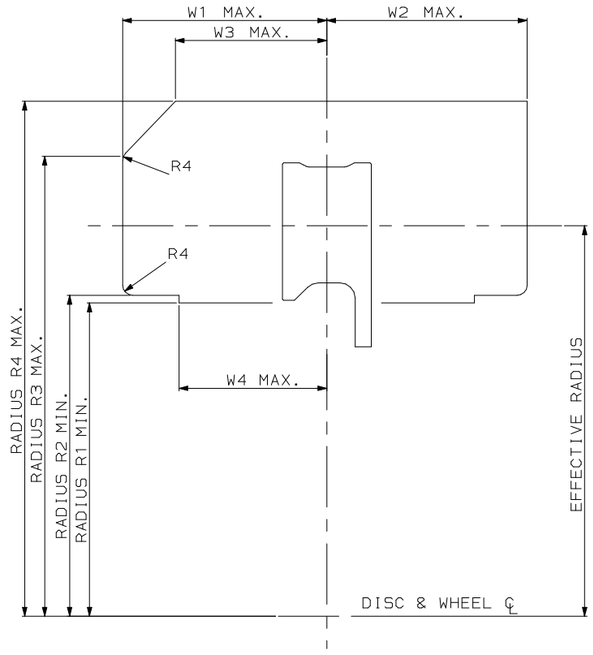

CALIPER RADIAL PROFILE
TO SCALE FOR A ø362.0X35.56 DISC

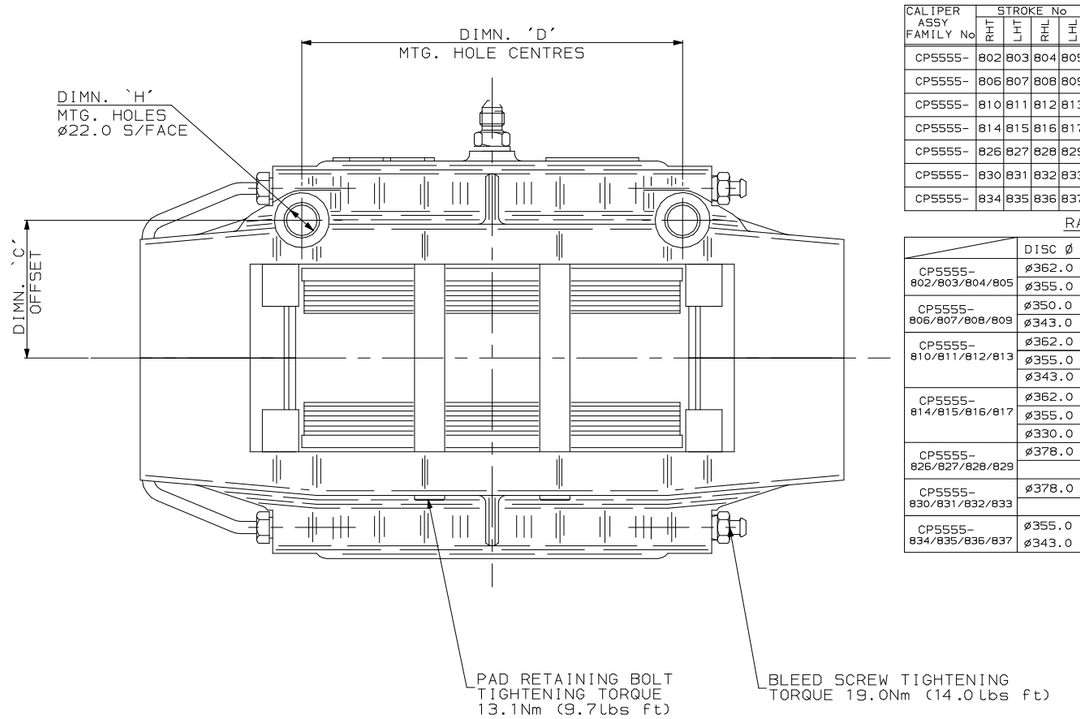

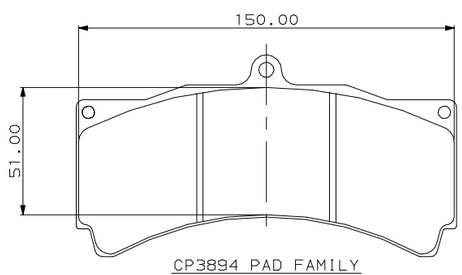

CP3894 PAD FAMILY

PAD THICKNESS = 18.00 mm
PAD AREA = 76.30 sq.cm
PAD VOLUME = 100.10 cu.cm

SPECIFICATION NOTES

WEIGHT LESS PADS 2.80Kg (ESTIMATED)
ALL HYDRAULIC THREADS M10 X 1.0 UNLESS

KEY TO DIMENSIONS-

DIMENSION 'PL' TOP OF PAD MATERIAL TO MOUNTING HOLE BOSS FACE WITH PAD SITTING DOWN ON LEDGE.
DIMENSION 'C' OFFSET - DISC CENTRE LINE TO MOUNTING HOLE CENTRE LINE.
DIMENSION 'D' MOUNTING HOLE CENTRES.
DIMENSION 'H' MOUNTING HOLE DIAMETER.
DIMENSION 'U' WHEEL CENTRE TO CALIPER MOUNTING HOLE BOSS FACE. (DISC DIAMETER/2)-'PL'DIMENSION

AP RACING TECHNICAL SECTION WILL BE PLEASED TO ADVISE ON THE MOST SUITABLE EQUIPMENT FOR ANY PARTICULAR APPLICATION.

1. SELECT ASSEMBLY FROM TABLE.
2. SELECT SUFFIX CHARACTERS AS FOLLOWS-
1st CHARACTER- 'S' DENOTES POSITION OF INLET ADAPTOR ('S' FOR SIDEFEED).
2nd CHARACTER- '0', '4' OR '7' DENOTES THE LOAD OF ANTI KNOCK BACK SPRINGS FITTED
'0'NO SPRINGS,
'4'4lb(17.8N)SPRINGS,
'7'7lb(31.0N)SPRINGS FITTED LOAD.
3rd CHARACTER- 'L'DENOTES PISTON MATERIAL. ('L' FOR STEEL)

SHOULD PISTONS BE INADVERTANTLY REMOVED, THEY SHOULD BE WIPED CLEAN AND SMEARED WITH AP RACING BRAKE FLUID BEFORE REPLACEMENT.

3. THE CORRECT PAD FAMILY NUMBER FOR THIS CALIPER IS CP3894. PADS SHOULD BE ORDERED SEPARATELY. A WIDE VARIETY OF MATERIALS ARE AVAILABLE:- PLEASE CONTACT A.P. RACING FOR ADVICE.

EXAMPLE PART NUMBER - CP5555-810S4

CALIPER IDENTIFICATION CHART		
RHT	RIGHT HAND TRAILING	BEHIND AXLE
LHT	LEFT HAND TRAILING	BEHIND AXLE
RHL	RIGHT HAND LEADING	IN FRONT OF AXLE
LHL	LEFT HAND LEADING	IN FRONT OF AXLE

CALIPER ASSY FAMILY No	STROKE No RH	LHT	RHL	LHL	DISC DIAØ	DISC WIDTH DIM'E'	DIMN 'C'	DIMN 'H'	DIMN 'D'	DIMN 'PL'	REMARKS & APPLICATION
CP5555-	802	803	804	805	362.0	35.56	55.00	12.10	152.00	62.50	
CP5555-	806	807	808	809	350.0	32.00	53.20	12.10	152.00	62.50	
CP5555-	810	811	812	813	362.0	32.00	46.00	12.10	180.00	62.50	
CP5555-	814	815	816	817	362.0	32.00	53.20	12.10	152.00	62.50	
CP5555-	826	827	828	829	378.0	32.00	46.00	12.10	180.00	62.50	
CP5555-	830	831	832	833	378.0	35.56	55.00	12.10	152.00	62.50	
CP5555-	834	835	836	837	350.0	35.56	55.00	12.10	152.00	62.50	

RADIAL PROFILE CHART.

	DISC Ø	EFF RAD	RAD 1	RAD 2	RAD 3	RAD 4	W 1	W 2	W 3	W 4
CP5555-802/803/804/805	ø362.0	155.85	125.0	128.0	183.5	205.5	81.5	80.0	60.5	60.7
	ø355.0	152.45	121.5	124.5	180.5	203.0	81.5	80.0	60.5	60.7
CP5555-806/807/808/809	ø350.0	150.00	119.5	122.0	178.0	195.5	79.8	78.3	58.8	59.0
	ø343.0	146.68	116.0	118.5	174.5	193.5	79.8	78.3	58.8	59.0
CP5555-810/811/812/813	ø362.0	155.85	125.0	128.0	183.5	205.5	79.8	78.3	58.8	59.0
	ø355.0	152.45	121.5	124.5	180.5	203.0	79.8	78.3	58.8	59.0
	ø343.0	146.68	116.0	118.0	172.0	198.0	79.8	78.3	58.8	59.0
CP5555-814/815/816/817	ø362.0	155.85	125.0	128.0	183.5	205.5	79.8	78.3	58.8	59.0
	ø355.0	152.45	121.5	124.5	180.5	203.0	79.8	78.3	58.8	59.0
	ø330.0	140.40	109.0	112.0	168.5	194.5	79.8	78.3	58.8	59.0
CP5555-826/827/828/829	ø378.0	163.60	133.0	136.0	191.5	213.5	79.8	78.3	58.8	59.0
CP5555-830/831/832/833	ø378.0	163.60	133.0	136.0	191.5	213.5	81.5	80.0	60.5	60.7
CP5555-834/835/836/837	ø355.0	152.45	121.5	124.5	180.5	198.0	81.5	80.0	60.5	60.7
	ø343.0	146.68	116.0	118.0	172.0	193.0	81.5	80.0	60.5	60.7

ISSUE NO.	DATE & NO.	ALTERATIONS PARTICULARS	CHK'D
1	23/09/97 R0116	FIRST ISSUE	
2	06/10/97 RAC06750	(N7) 1.06" WAS 1.60"	JS
3	20/10/97 RAC06783	LOGO DETAILS UPDATED TO SHOW MACHINED CHEVRONS.	JS
4	07/07/98	BLEED SCREW TORQUE WAS 5.5Nm, NOW 17.0Nm	RB
5	07/12/99 R0566	ADDED CP5555-48/49/50/51	TTF
6	12/05/00 R0624	DRAWING CHANGED TO REFLECT NEW CALIPERS	GD
7	27/06/00 R0624	'PL'S CORRECTED. 62.50 WAS 63.50	GD
8	14/03/02	ø362 PROFILE ADDED TO -814-7 PROFILE CHART	GD
9	24/09/02 RAC10788	ø378 CALIPER ASSEMBLIES -826/827/828/829 ADDED	DH
10	16/12/02 R1143	ø343 VERSION OF ASSEMBLY -810/811/812/813 ADDED	DH
	R1117	ø343 AND 355 CALIPER ASSEMBLIES - 834/835/836/837 ADDED	
11	07/08/03	-806/807/808/809 ADDED PROFILE DIM'N W4 ADDED	GD
12	22/01/07 R2220	-830/831/832/833 ADDED	RB
13	30/06/10 R2993	19.0Nm WAS 13.1Nm	RB

MATERIAL

MATERIAL SPECIFICATION(S)

TREATMENT

DRAWN	Jon Simmonds	CHECKED	
RE-DRAWN		CHECKED	

GENERATED FROM ×

UNLESS OTHERWISE STATED:
DIMENSIONAL TOLERANCES ±0.25
ANGULAR TOLERANCES ±0°30'
MAX SURFACE FINISH,
BY ANY METHOD √= µm(Ra)
ON MACHINED SURFACES √= µm(Ra)
WITHOUT MATERIAL REMOVAL √= µm(Ra)
DIMENSIONS [redacted]
IN MILLIMETERS
DRAWING TO B.S.308.
THREADS TO B.S.3643 PT2(MEL110).
REMOVE BURRS.

TITLE

SHEET SIZE IMP: 27" × 40"

SCALE FULL

TRANSLATION SHEET NO(S)

SHEET NO. TOTAL 1 OF 1

cp5555-1cd

TITLE
1.5"/1.25"/1.0625" RADIAL MTG CALIPER - WIPER SEALS. INSTALLATION DRG.

PART NO.
CP5555-1

GROUP PART NO.