A2 INSTALLATION DRAWING

If this document is printed in hardcopy, it is for information use only and therefore is not subject to updating controls. Always refer to viewer for latest issue.

FIRST ANGLE PROJECTION

THIS DRAWING IS CONFIDENTIAL AND IS SUPPLIED ON THE EXPRESS CONDITION THAT IT SHALL NOT BE LOANED OR COPIED OR DISCLOSED TO ANY OTHER PERSON OR USED FOR ANY OTHER PURPOSE WITHOUT THE WRITTEN CONSENT OF AP RACING LTD.

AP Racing
Wheler Road
Coventry
CV3 4LB

Tel: +44 024 7663 9595
Fax: +44 024 7663 9559
e-mail: sales@apracing.co.uk
Web site:http://www.apracing.com

© AP Racing Ltd. 2005

PART NUMBER
CP3550-13

GENERAL DESCRIPTION
PROPORTIONING VALVES ARE SPECIALLY DESIGNED FOR USE IN COMPETITION VEHICLES WHERE IT IS DESIRED TO REDUCE THE HYDRAULIC LINE PRESSURE AND THEREFORE BRAKING EFFORT OF USUALLY REAR BRAKES TO COMPENSATE FOR VARYING ROAD/TRACK CONDITIONS OR VEHICLE HANDLING CHARACTERISTICS.

THIS PROPORTIONING VALVE WITH IT'S ADJUSTMENT HANDLE OFFERS THE DRIVER, OR THE CO -DRIVER WITH SEVEN DISTINCT SETTINGS FROM WHICH TO SELECT THE MOST SUITABLE BRAKE RATIO.

THIS VALVE HAS A NOMINAL RATIO OF 0.325.

WEIGHT
180g (APPROX)

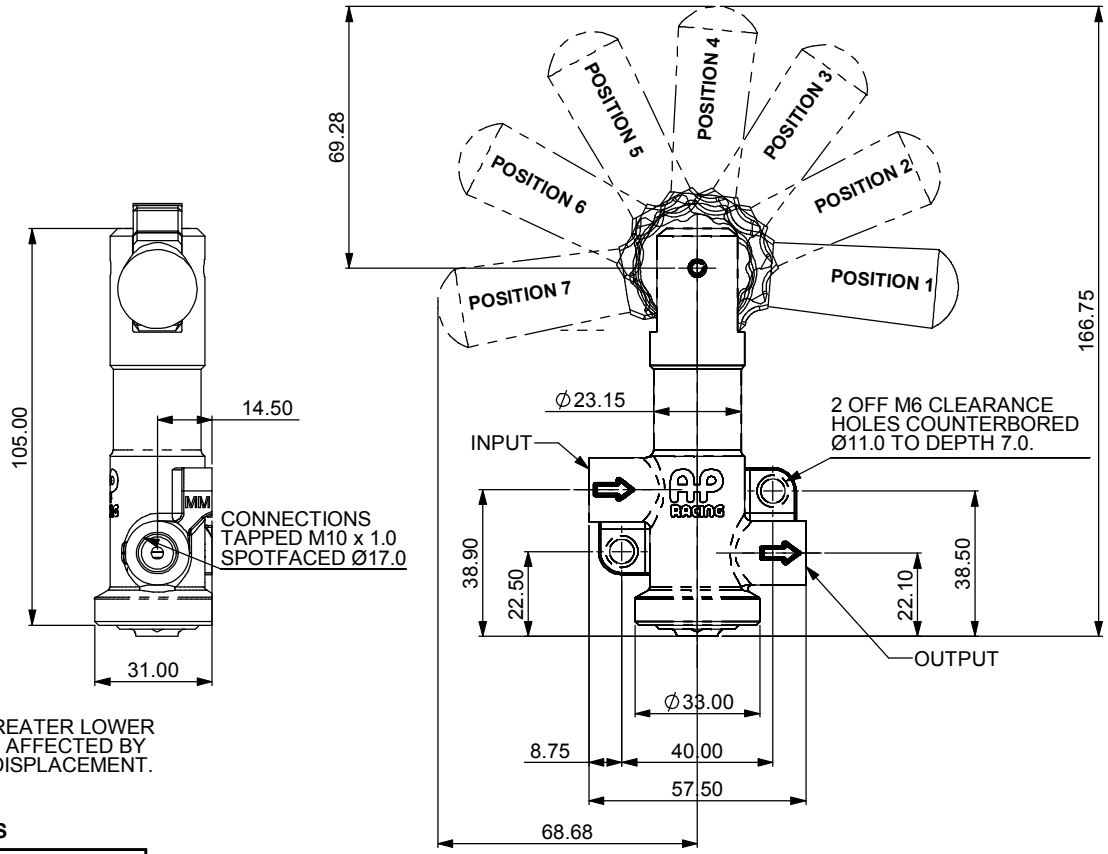

CP3550-13, HANDLE TYPE PROPORTIONING VALVE, PERFORMANCE CHARTS

TYPICAL VALVE PERFORMANCE

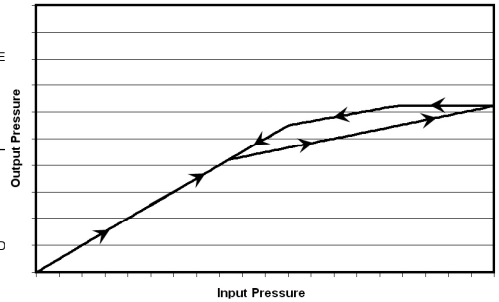

GRAPH NOTES:
HYSTERESIS IS GREATER LOWER POSITIONS AND IS AFFECTED BY THE REAR FLUID DISPLACEMENT.

VALVES SETTINGS CHART WITH TOLERANCES

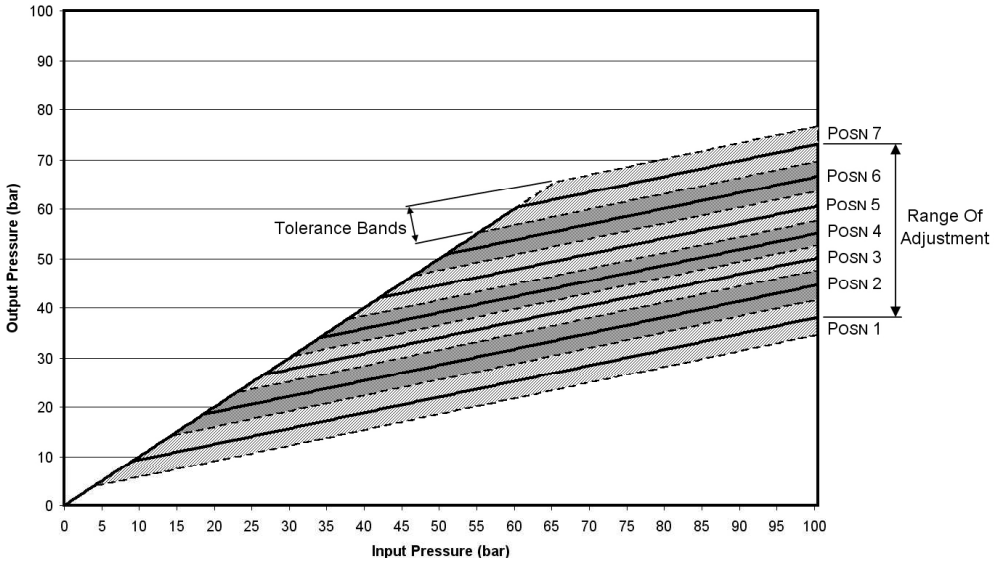

AP RACING TECHNICAL SECTION WILL BE PLEASED TO ADVISE ON THE MOST SUITABLE EQUIPMENT FOR ANY PARTICULAR APPLICATION AND CAN PROVIDE MORE DETAILED TECHNICAL INFORMATION IF REQUIRED.

DUE TO INTERNAL ADJUSTMENT SET BY AP RACING, **DO NOT** STRIP THIS ASSY. **DO NOT** ATTEMPT ANY MODIFICATIONS OF THIS VALVE.

Output Pressure With 100 bar Input Pressure

Posn	Nom	Min	Max
1	38.0	34.5	41.5
2	44.5	41.5	47.5
3	50.0	47.5	52.5
4	55.0	52.5	57.5
5	60.5	57.5	63.5
6	66.5	63.5	69.5
7	73.0	69.5	76.5

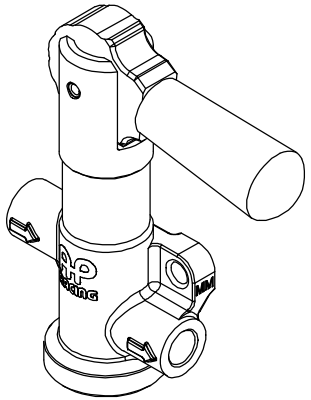

Issue No.	Date & No.	Alterations: Particulars	Zone	Initials
1	29/06/2009 B5626	FIRST ISSUE	#	CDA

SCALE 1:1 | SHEET 1 OF 1
DRAWN: Chris Arrowsmith
APPROVED:
DERIVED FROM:

TITLE
PROPORTIONING VALVE
INSTALLATION DRAWING

DRG NO. CP3550-13CD