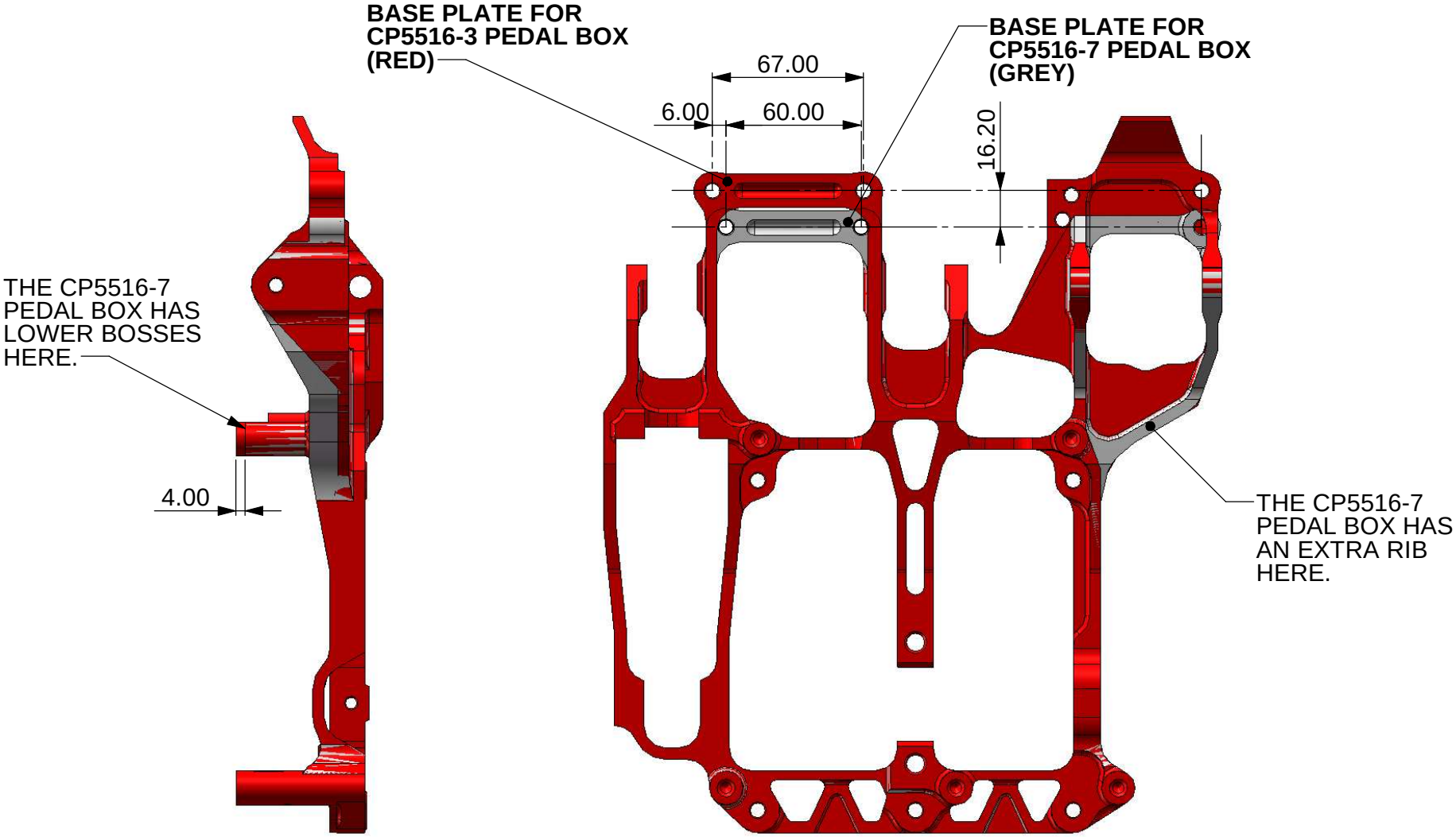
BASE PLATE FOR
CP5516-3 PEDAL BOX
(RED)
BASE PLATE FOR
CP5516-7 PEDAL BOX
(GREY)
67.00
6.00
60.00
16.20
THE CP5516-7
PEDAL BOX HAS
LOWER BOSSES
HERE.
4.00
THE CP5516-7
PEDAL BOX HAS
AN EXTRA RIB
HERE.